REV.	DESCRIPTION	DATE	APPROVED

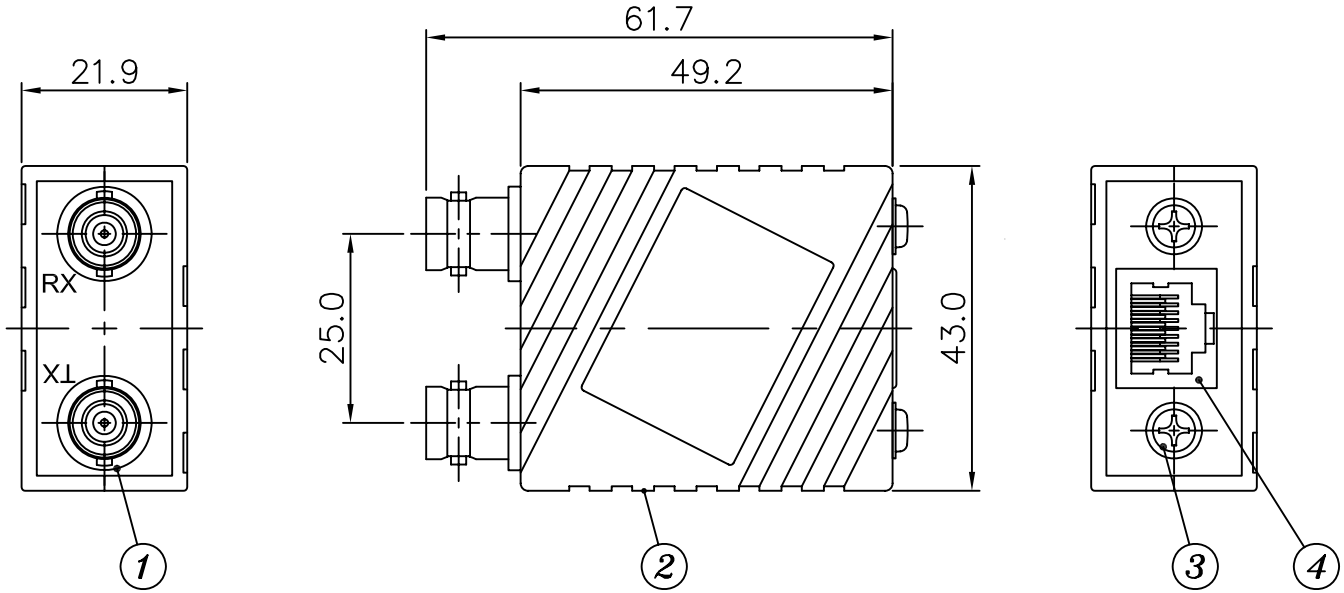

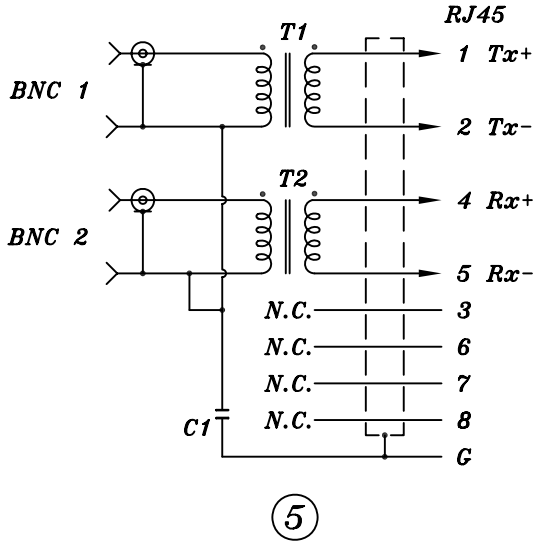

TECHNICAL SPECIFICATION:
DATA RATES TO 2.048 Mbps
75Ω DUAL COAX TO 120Ω TWISTED PAIR
BI-DIRECTIONAL SIGNAL CONVERSION
NO AC POWER OR BATTERIES NEEDED

NO	DESCRIPTION	MATERIAL	REMARK	Q'TY
5	PCB SET WITH 2 TRANSFORMER			1
4	PCB TYPE SHIELDED JACK	GLASS FILLED POLYESTER	UL94V-0	1
3	SCREW M3*P0.5*5L	Fe FINISH NICKEL		2
2	PLASTIC SET (TOP,BOTTOM & SIDE COVER)	ABS(UL94V-0)		1
1	BNC FEMALE SOLDER TYPE	BRASS FINISH NICKEL		2

UNLESS OTHERWISE SPECIFIED
TOLERANCE ARE:
FRACTIONS DECIMALS ANGLES
.X ±0.1 ±0.5°
.XX ±0.05

MATERAL

FINISH

DO NOT SCALE DWG.

CONTRACT NO.

APPROVALS	DATE
DRAWN	
CHECKED	
ISSUED	

UNIT mm

LEMAR ENTERPRISES CO.LTD

CCITT G.703 BALUN
DUAL BNC FEMALE WITH SCREW
IN CENTER TO RJ45 SHIELDED JACK

SIZE	FSCH NO.	DWG NO..	REV.
A4		B166F2009XS-2SA	

SCALE 1 : 1 SHEET OF